Supplement A:

In Fig.1 we show a schematic picture that described the effects of solutes upon ice melting and nucleation. The green line indicates the ice melting point line (T_m) as a function of decreasing water activity (resulting from an increase in solute concentration), also frequently termed the colligative melting point depression line. In water activity space, this line is identical for any solute, and a numerical description is given in Koop and Zobrist (2009). For example, adding a buffer to pure water reduces the ice melting point temperature by the melting point depression ΔT_m. Similarly, solutes do also affect the heterogeneous ice nucleation temperature (T_{het}) specific for an IN. For example, $T_{het,w}$ in pure water is reduced by the addition of the buffer by the amount ΔT_{het} to the reduced $T_{het,b}$ in buffer. We can depict ΔT_{het} as the colligative effect of a solute upon heterogeneous ice nucleation. Moreover, it has been shown experimentally, that the corresponding blue line connecting all ice nucleation temperatures (T_{het}) for a specific concentration of IN is horizontally parallel to the green ice melting point line (Zobrist et al, 2008; Koop and Zobrist, 2009). The horizontal offset is specific to each IN and is usually termed $\Delta a_{w,het}$(IN). With this information, we can correct for the colligative effect of any solute and, hence, also any buffer, upon the heterogeneous ice nucleation temperature. We have applied this correction in the following way. First, we calculate the water activity of each buffer solution. This calculation was performed by determining the concentration of all ionic and non-ionic solute species introduced by adding the buffer stock solutions, including a consideration of the relevant dissociation equilibrium of HAc (Ks = 1.7540×10^{-5}). Because the total molality of all solute species b_s was less than 0.5 mol kg^{-1} in both cases, we assumed ideal behaviour for calculating the water activity, a_w, of the solution after addition of a buffer. Hence, we can substitute the mole fraction of water, x_w, for water activity by $a_w = x_w = b_w/(b_w+b_s)$, where b_w = 55.5093 mol kg^{-1} is the molality of water in the solution. From these caluclations we obtain a_w values of 0.99378 and 0.99160 for the pH 5.9 and pH 4.1/NaCl buffers, respectively.
From the experimentally determined ice nucleation temperature in a given buffer $T_{het,b}$(exp) (solid red point in Fig. 2), we construct a T_{het} line (red dashed line) that is horizontally parallel in water activity space to the ice melting point line (T_m, green solid line). The intersection of this red dashed line with the y-axis at a_w = 1 (open red square) is then the hypothetical ice nucleation temperature of the IN in pure water $T_{het,wb}$(hyp), adjusted for the colligative effect (ΔT_{het}). This value can then be compared to the actual experimental ice nucleation temperature of the IN in pure water $T_{het,w}$(exp) (solid blue square). In case the presence of the buffer does not have any effect upon the IN apart from the colligative one, the experimental and hypothetical ice nucleation temperatures should be identical, i.e. $T_{het,wb}$(hyp) = $T_{het,w}$(exp) (middle panel in Fig. 2). If the IN becomes less active in the presence of buffer, for example by changing the ice nucleating protein complex, the hypothetical ice nucleation temperature should be below the experimental one, i.e. $T_{het,wb}$(hyp) < $T_{het,w}$(exp) (lower panel). Likewise, if the IN becomes more active, the hypothetical ice nucleation temperature should be higher than the experimental one $T_{het,wb}$(hyp) < $T_{het,w}$(exp) (upper panel).

We have made the corresponding correction for colligative effects of the buffer described here for each freezing temperature. For example, the cumulative number of IN per bacterium in a pH 5.9 buffer measured at -3 °C corresponds to the same cumulative number of IN per bacterium in water at -2.34 °C, i.e. the colligative correction was +0.66 °C. In summary, the temperature corrections were approximately plus 0.66-0.7 °C for the pH 5.9 buffer and approximately plus 0.89-0.94 °C for the pH 4.1 buffer. The difference between the measured cumulative number of IN per bacterium in droplets with buffer adjusted for the colligative solute effect and that measured separately in pure water without buffer is then attributed to the

effect of pH owing to changes induced in the ice nucleating protein complex at a different pH.

In order to allow a statistical comparison of data between both pH buffers and distilled water the cumulative number of IN per bacterium were required at the same temperature values. While the pure water data were available at temperatures with integer values of supercooling, those of the buffer data were not owing to the individual solute corrections. Therefore, we linearly interpolated the two nearest buffer data temperature values to obtain values at integer values of supercooling (e.g. the data at -2.34 °C and -3.34 °C were linearly interpolated to yield the value at -3.0 °C).

Fig. 1: Schematic picture for describing the colligative effect of solutes upon the ice melting point line (green line) and upon the heterogeneous ice nucleation temperature line (blue line) for an IN immersed in aqueous solutions; for details see text.

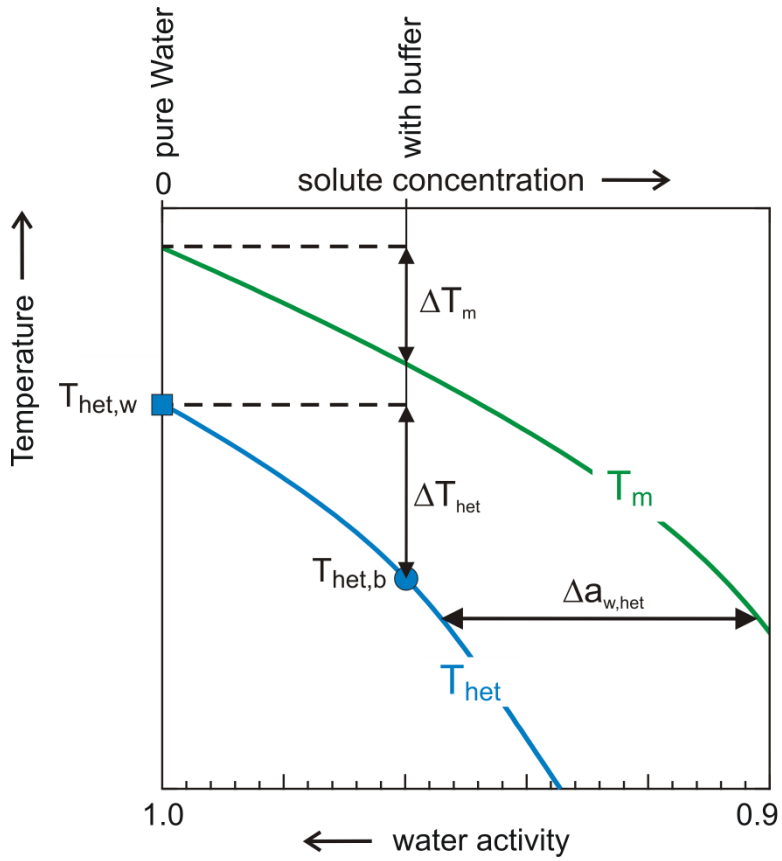

Fig. 2: Schematic picture for describing the approach taken in this work to adjust for the colligative effect of buffer upon the investigated heterogeneous ice nucleation temperatures (for details see text).

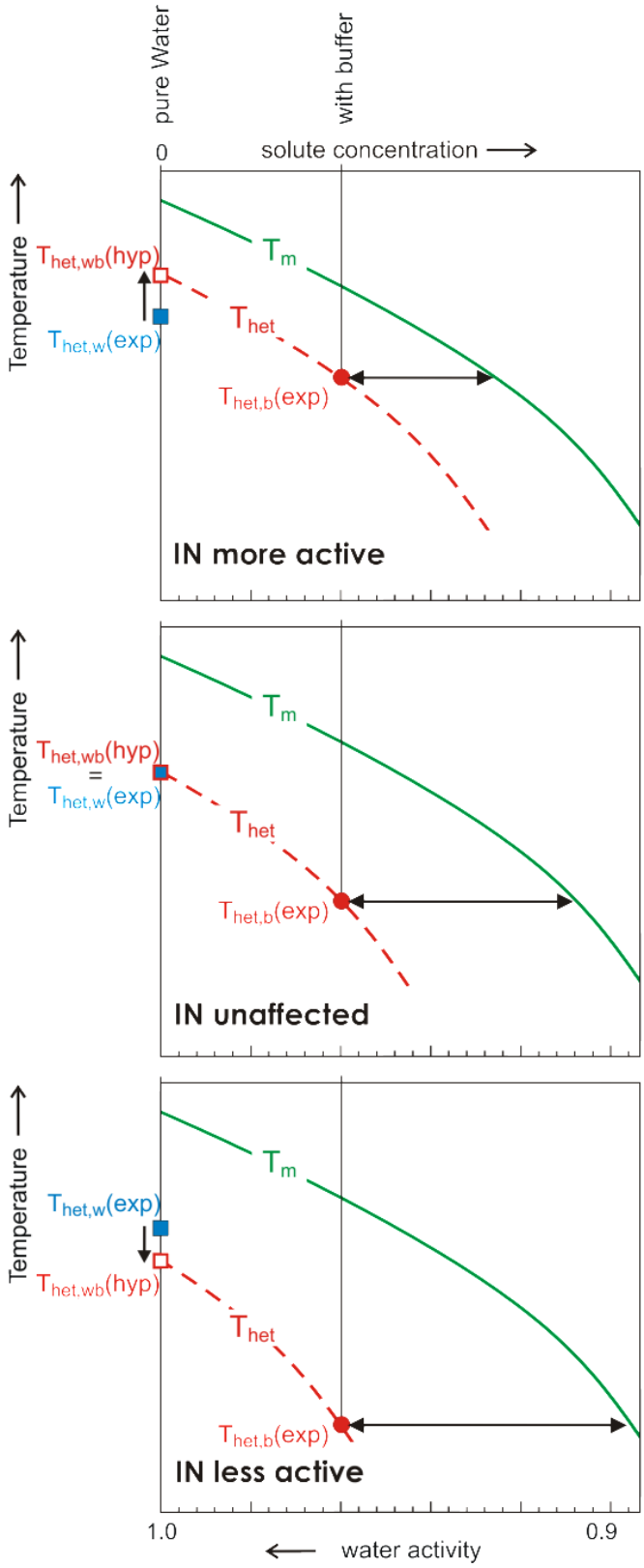

Supplement B: Diagram of the bacteria gas exposure system. RM stands for rotameter. Bacteria were loaded onto the syringe filter.

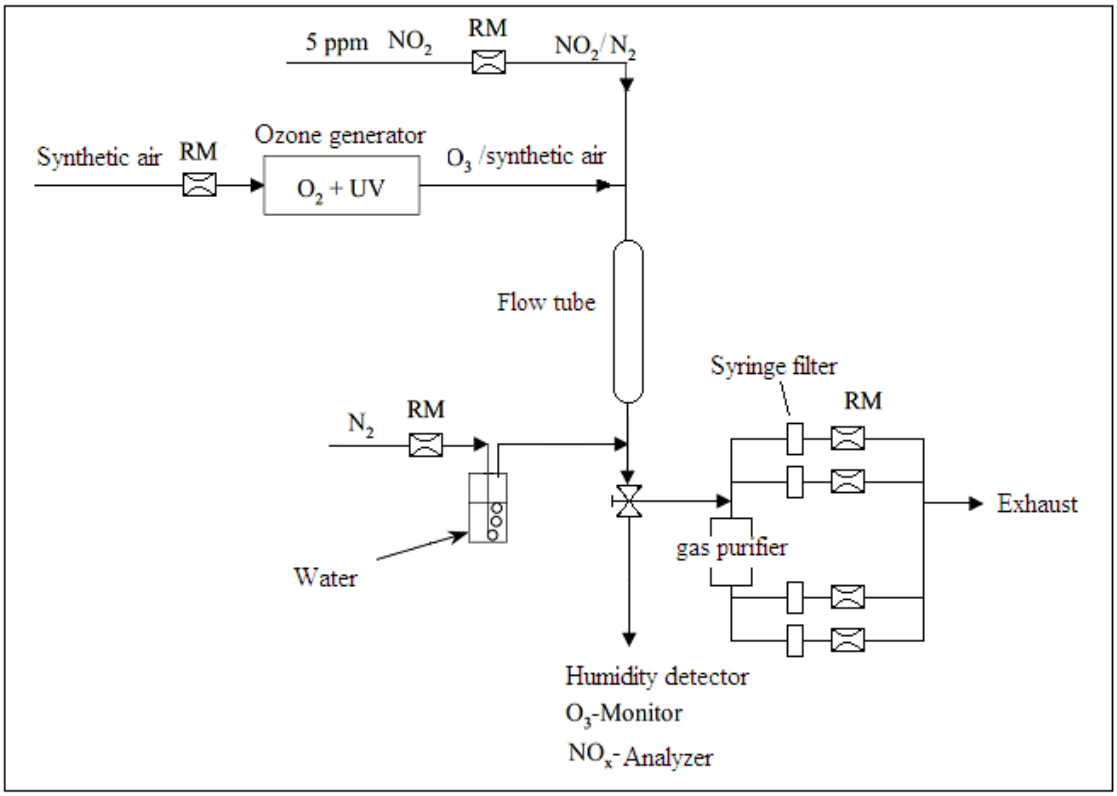

Supplement C: Ice nucleation spectra of *Pseudomonas* strains subjected to different pH: pH=4.1 (red), pH=5.9 (blue) and in distilled water as a control (green). For each pH, dotted lines correspond to original data whereas solid lines correspond to data corrected for water activity of the buffer. The horizontal line corresponds to the lower limit of detectable activity depending on the initial bacterial concentration of each experiment. Symbols are as in Figure 1. At each temperature, values associated with different letters are significantly different ($p<0.05$) based on Tukey's test. ns: no significant treatment effect. Errors bars indicate standard errors (n=4).

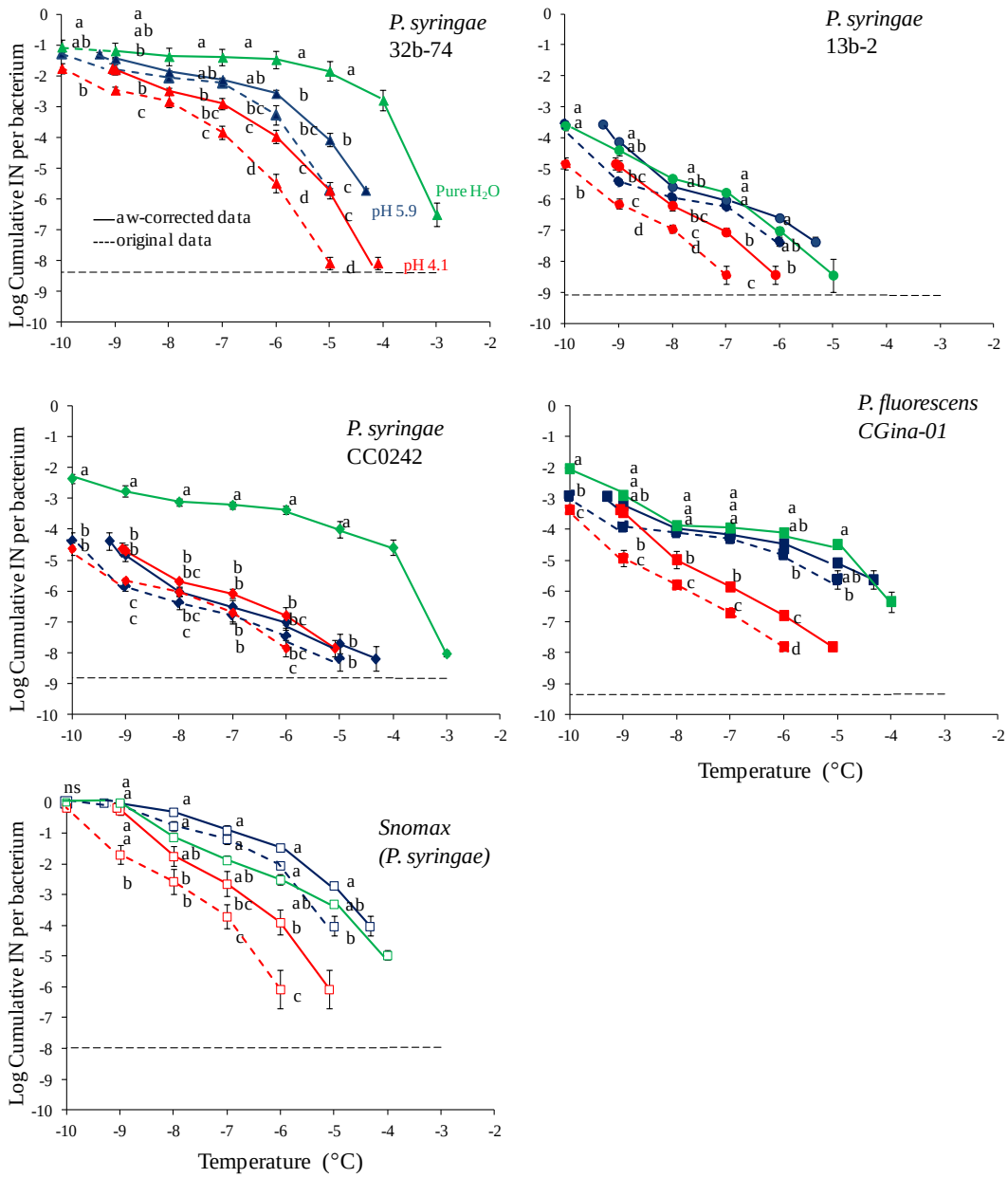

Supplement D: Ice nucleation spectra of *Pseudomonas* strains subjected to 42 h of UV-A exposure (solid line) or darkness (dotted line). The horizontal line corresponds to the lowest value of detectable activity, which depends on the initial bacterial concentration of each experiment. Symbols are as in Figure 1. INA was calculated by dividing the number of Ice Nuclei (IN) recorded after 42 h of UV-exposure by the viable cell number counted after 42h of UV exposure. At each temperature, values associated with different letters are significantly different ($p<0.05$) based on Tukey's test. ns: no significant treatment effect. Errors bars are standard errors (n=4).